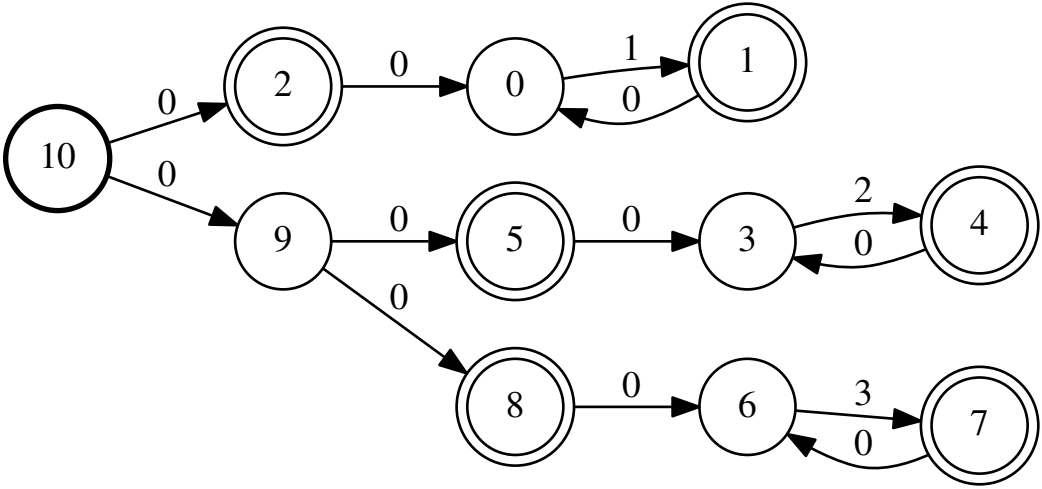
10
0
0
2
0
0
1
1
0
9
0
5
0
3
2
4
0
0
8
0
6
3
7
0